K-Series

Plugs

FGG

FPG

Receptacles

EGG

EEG

Technical Characteristics

Climatical category	IEC 60068-1	55/175/21
Protection index(mated)	IEC 60529	IP68
Salt spray corrosion test	IEC 60512-6 test 11f	>96h
Shock resistance	IEC 60512-4 test 6c	100g,6ms
Resistance to vibration	IEC 60512-4 test 6d	10-2000Hz,15g
Temperature Range	-55°C,+250°C	
Humidity	Up to 95% at 60%	
Endurance	IEC 60512-5 test 9a	>5000cycles
Characteristics	Standrad	Value

Panel-Dip Rear mount

FGG

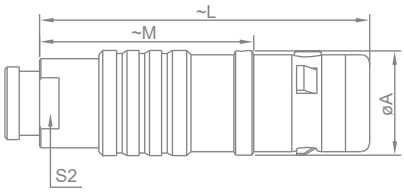

Reference		Dimensions(mm)		
Model	Series	A	L	S2
FGG	0K	11.0	34.0	7.0
FGG	1K	13.0	42.0	9.0
FGG	2K	16.0	52.0	12.0

FPG

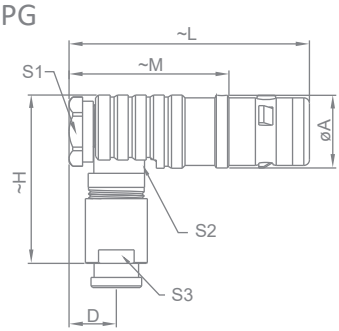

Reference		Dimensions(mm)				
Model	Series	A	H	L	S1	S3
EPG	0K	11.0	25.0	36.0	9.0	8.0
EPG	1K	13.0	33.0	42.0	11.0	10.0
EPG	2K	16.0	40.0	51.0	14.0	13.0

EGG

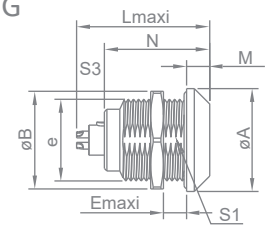

Reference		Dimensions(mm)						
Model	Series	A	e	E	L	M	N	S1
EGG	0K	18.0	M14x1.0	6	21.7	4.0	20.0	12.5
EGG	1K	20.0	M16x1.0	9	27.0	4.5	25.1	14.5
EGG	2K	25.0	M20x1.0	9	30.7	5.0	28.6	18.5

EEG

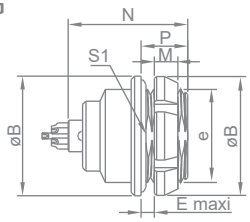

Reference		Dimensions(mm)					
Model	Series	A	e	E	M	N	S1
EEG	0K	18.0	M14x1.0	3.4	20.1	20.1	12.5
EEG	1K	20.0	M16x1.0	6.2	25.1	25.1	14.5
EEG	2K	25.0	M20x1.0	5.0	28.6	28.6	18.5

Alignment Key

Front view of receptacle

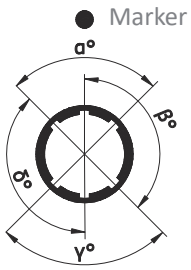

Code	Key No.	Angles	Series			Contact Type	
			0K	1K	2K	Plug	Receptacle
G	1		0°	0°	0°	Male	Female
A	2	a	30°	30°	30°	Male	Female
B	2		45°	45°	45°	Male	Female
C	2		60°	60°	60°	Male	Female
D	2	Y	95°	95°	95°	Male	Female
E	2	β	120°	120°	120°	Male	Female
F	2		145°	145°	145°	Male	Female

Insulator Configuration

0K	Socket side							
	Contact No.	2	3	4	5	6	7	9
	Insulator	02	03	04	05	06	07	09
	øA(MM)	0.9	0.7	0.7	0.7	0.5	0.5	0.5

1K	Socket side							
	Contact No.	2	3	4	5	6	7	8
	Insulator	02	03	04	05	06	07	08
	øA(MM)	1.3	1.3	0.9	0.9	0.7	0.7	0.7

1K	Socket side			
	Contact No.	10	14	16
	Insulator	10	14	16
	øA(MM)	0.5	0.5	0.5

2K	Socket side							
	Contact No.	2	3	4	5	6	7	8
	Insulator	02	03	04	05	06	07	08
	øA(MM)	2.0	1.6	1.3	1.3	1.3	1.3	0.9

2K	Socket side							
	Contact No.	10	12	14	16	18	19	26
	Insulator	10	12	14	16	18	19	26
	øA(MM)	0.9	0.7	0.7	0.7	0.7	0.7	0.5

Part Numbering System

□□□K□□ - □□□ M S - □□□

Cable：

Type:FG/FP

Size:0/1/2

Coding:
G:0°
A:30°
B:45°
C:60°
D:95°
E:120°
F:145°
L:75°

Material&Surface Plating:
C: Brass with neutral chrome plated
S: Brass with black chrome plated
Q: Brass with ashed chrome plated
L: Aluminum with ashed chrome plated
H: Aluminum with black chrome plated

Insulator:
P:PPS
K:PEEK

Pin Number:02~32

Cable Collect:
42:2.5-4.2 (Size 0)
52:4.3-5.2 (Size 0)
62:5.3-6.2 (Size 0)
72:6.3-7.2 ((Size 0)
76:7.3-7.5 (Size 0)
42:3.2-4.2 (Size 1)
52:4.3-5.2 (Size 1)
62:5.3-6.2 (Size 1)
72:6.3-7.2 (Size 1)
82:7.3-8.2 (Size 1)
92:8.3-9.2 (Size 1)
99:9.3-9.7 (Size 1)
62:4.9-6.2 (Size 2)
72:6.3-7.2 (Size 2)
82:7.3-8.0 (Size 2)
92:8.1-9.2 (Size 2)

Sealing Nut:
0:No Sealing Nut
1:Standard
Z:For Bend Relief

□□□K□□ - □□□FS - 001

Type:EG/EE

Size:0/1/2

Panel：

Coding:
G:0°
A:30°
B:45°
C:60°
D:95°
E:120°
F:145°
L:75°

Material&Surface Plating:
C:Brass with neutral chrome plated
S:Brass with black chrome plated
Q:Brass with ashed chrome plated
L:Aluminum with ashed chrome plated
H:Aluminum with black chrome plated

Insulator:
P:PPS
K:PEEK

Pin Number:02~32