REV.	ECN NO.	DATE	SIGN	DESCRIPTION
01	Initial Release	2021/08/31	YU-FEI	New Item

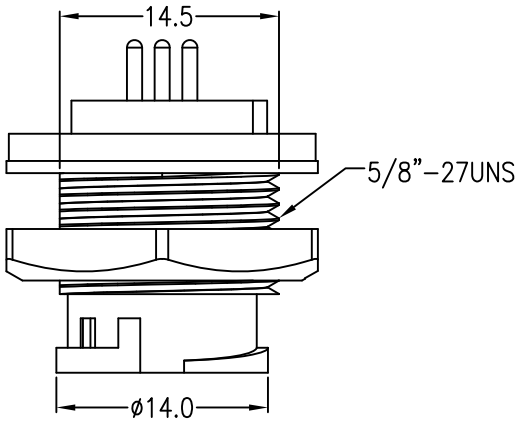

柏達康科技有限公司
Prodaconn
2021/08/31
ISSUED

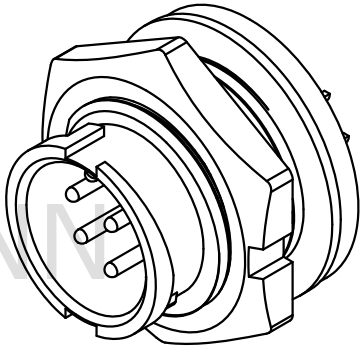

PRODACONN

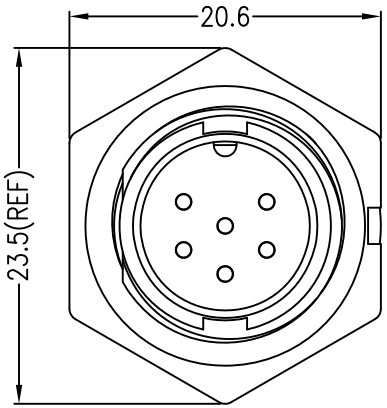

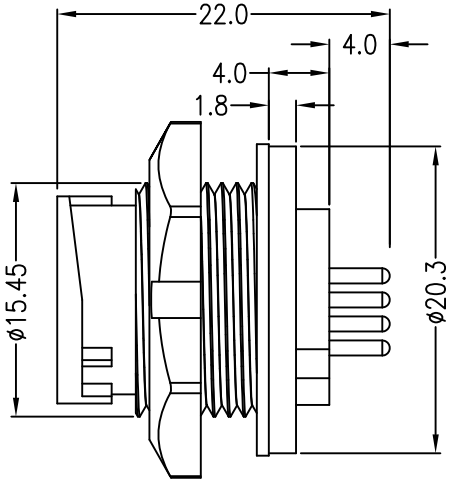

Note:
* IP Grade: IP67
* Rated current: 5A
* Rated voltage: 250V

NO.	ITEM	SPEC	QTY
4	CIRCULAR STANDARD PANEL	Nut: Nylon	1
3		Gasket: Rubber	1
2		Pin: Copper Alloy,Gold Plated	6
1		Housing: Nylon,Black	1

BOM LIST

PRODACONN

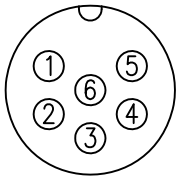

Pin Assignments
Front View

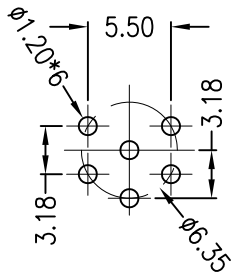

PCB LAYOUT

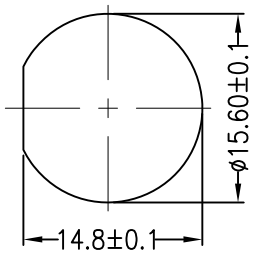

RECOMMENDED
PANEL CUT-OUT

All dimension in mm

PRODACONN

TOLERANCE UNLESS OTHERWISE SPECIFIED	REV.
±0.5	01
	SCALE 1:1

DRAWN BY	APPROVED BY	DATE(Y/M/D)	PAGE	SIZE
YU-FEI	Roy	2021/08/31	1/1	A4

PART NO: CBD06-MMPF-LD0-F0

CUSTOMER NO:

TITLE: CIRCULAR STANDARD PANEL

THIS DOCUMENT IS CONFIDENTIAL AND A PROPERTY OF PRODACONN DISCLOSURE TO THIRD PARTY HAS TO BE AUTHORIZED BY PRODACONN