REV.	ECN NO.	DATE	SIGN	DESCRIPTION
01	Initial Release	2021/09/02	YU-FEI	New Item

柏達康科技有限公司
Prodaconn
2021/09/02
ISSUED

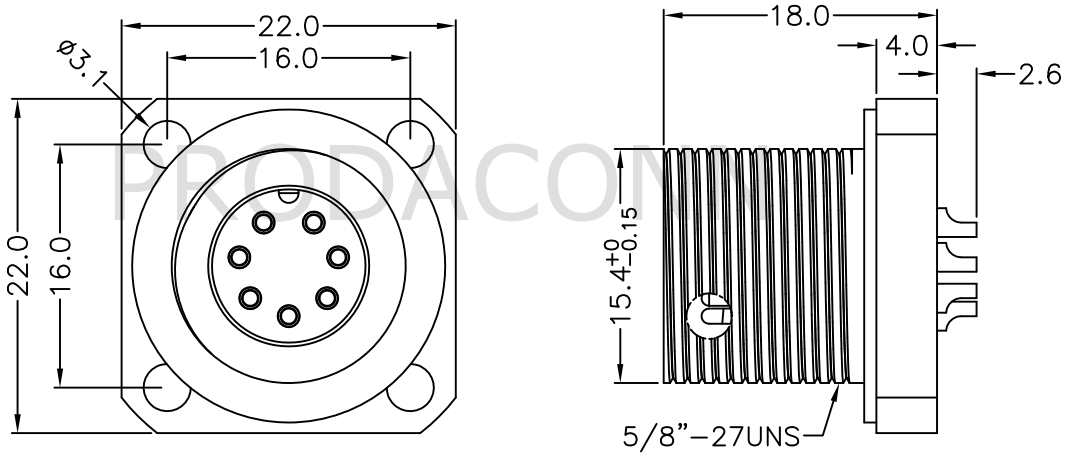

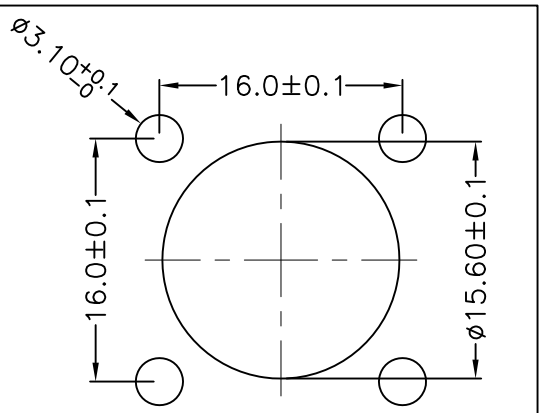

Recommended
Panel cut

Note:
* IP Grade: IP67
* Rated current: 5A
* Rated voltage: 250V

NO.	ITEM	SPEC	QTY
5	Circular Standard(Screw) Male (5A)	Shell: Copper Alloy,Nickel Plated	1
4		Nut: Copper Alloy,Nickel Plated	1
3		Gasket: Rubber	1
2		Pin: Copper Alloy,Gold Plated	7
1		Housing: Nylon,Black	1

BOM LIST

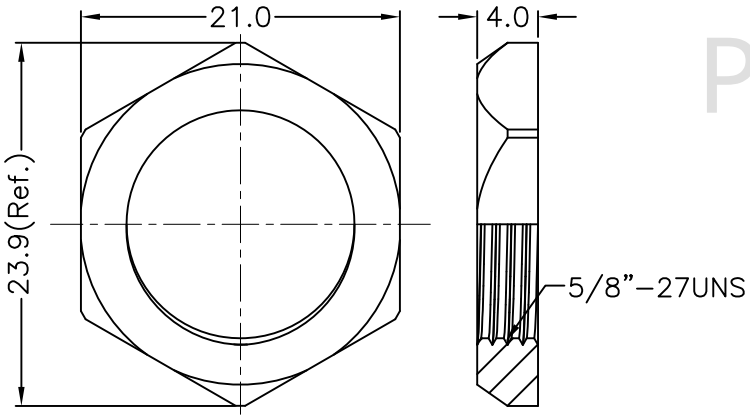

Nut

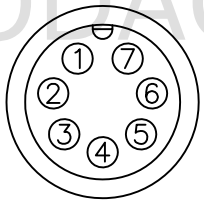

Pin Assignments
Front View

All dimension in mm

PRODACONN

TOLERANCE UNLESS OTHERWISE SPECIFIED	REV.
±0.5	01
	SCALE 1:1

DRAWN BY	APPROVED BY	DATE(Y/M/D)	PAGE	SIZE
YU-FEI	Roy	2021/09/02	1/1	A4

PART NO: CBD07-PPQF-LS0-F0

CUSTOMER NO:

TITLE: CIRCLE STANDARD PANEL, SHIELD(SQUARE)

THIS DOCUMENT IS CONFIDENTIAL AND A PROPERTY OF PRODACONN DISCLOSURE TO THIRD PARTY HAS TO BE AUTHORIZED BY PRODACONN

PRODACONN