REV.	ECN NO.	DATE	SIGN	DESCRIPTION
01	Initial Release	2021/06/25	Ann	New Item

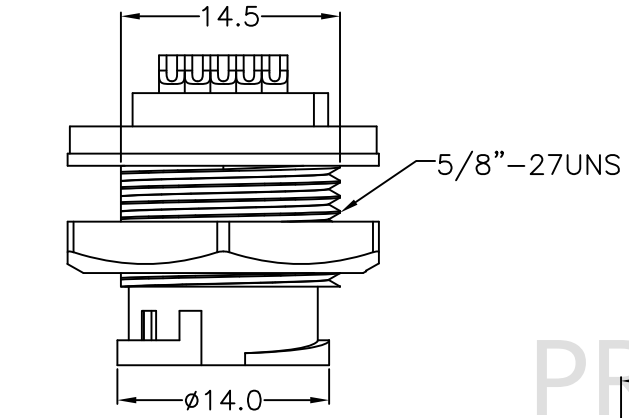

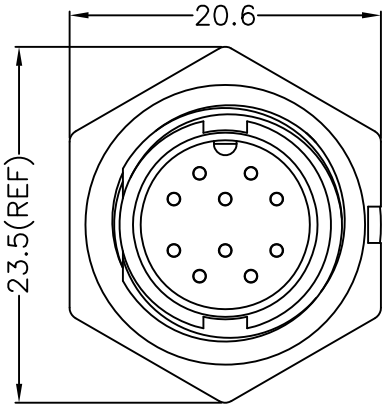

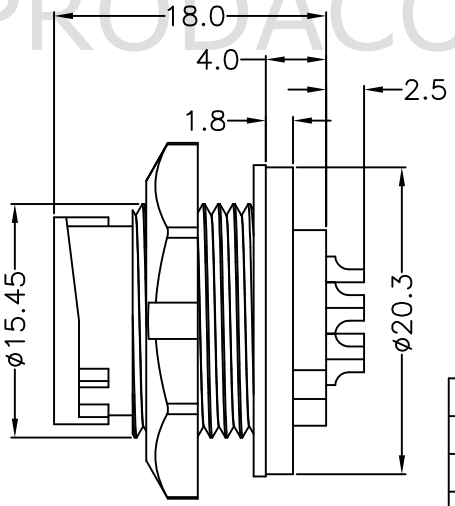

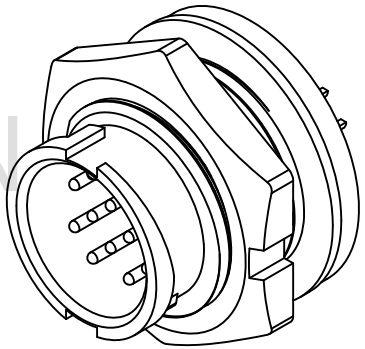

Note:
* IP Grade: IP67
* Rated current: 2A
* Rated voltage: 250V

NO.	ITEM	SPEC	QTY
4	Hex Nut	Nylon,Black	1
3	Gasket	Silicone	1
2	Male Pin	Copper Alloy,Gold Plated	10
1	Housing	Nylon,Black	1

BOM LIST

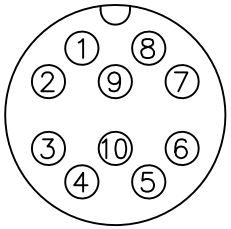

Pin Assignments
Front View

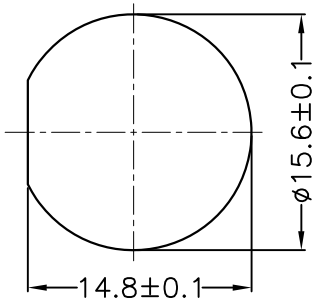

Recommend
Panel Cut-Out

PRODACONN
PRODACONN

Prodaconn
2021/06/25
ISSUED

All dimension in mm

PRODACONN

TOLERANCE UNLESS OTHERWISE SPECIFIED	REV.	SCALE
±0.5	01	1:1

DRAWN BY	APPROVED BY	DATE(Y/M/D)	PAGE	SIZE
Ann	Roy	2021/06/25	1/1	A4

PART NO: CBU10-MMPF-LS0-F0

CUSTOMER NO:

TITLE: CIRCULAR STANDARD(LOCK),PANEL

THIS DOCUMENT IS CONFIDENTIAL AND A PROPERTY OF PRODACONN DISCLOSURE TO THIRD PARTY HAS TO BE AUTHORIZED BY PRODACONN