REV.	ECN NO.	DATE	SIGN	DESCRIPTION
01	Initial Release	2021/09/06	YU-FEI	New Item

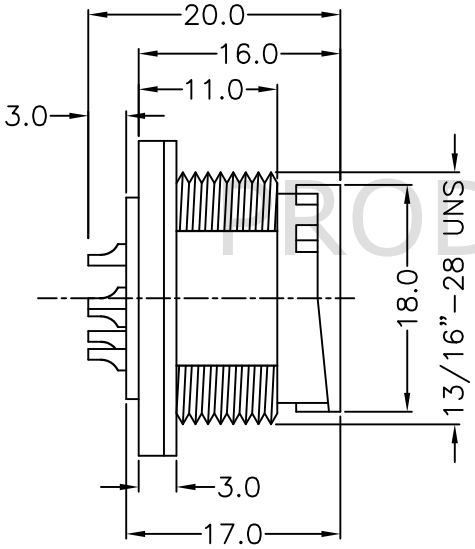

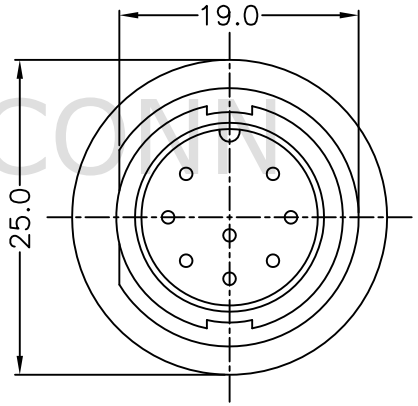

Prodaconn 柏達康科技有限公司
2021/09/06
ISSUSED

Note:
* IP Grade: IP67
* Rated current: 5A
* Rated voltage: 250V

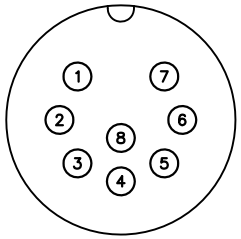

Pin Assignments
Front View

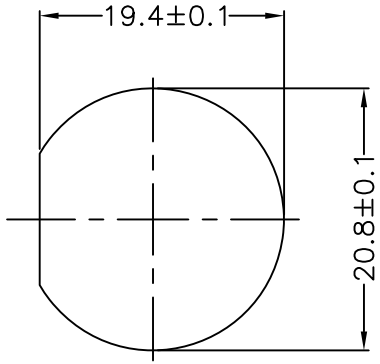

Recommend Panel Cut-Out

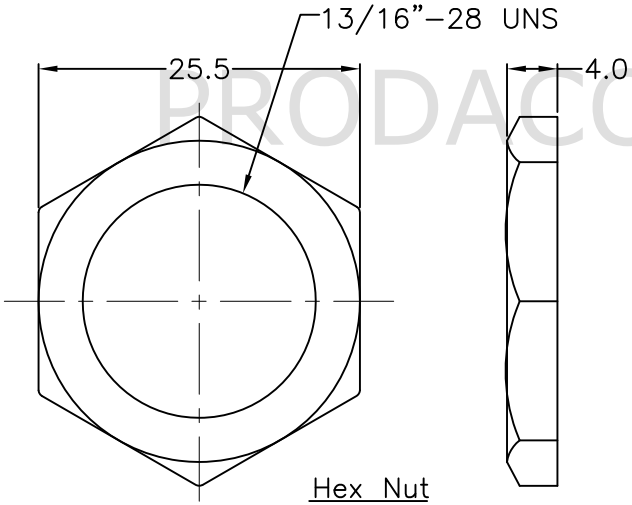

Hex Nut

NO.	ITEM	SPEC	QTY
4	CIRCULAR MIDDLE PANEL	Hex Nut: Nylon	1
3		Gasket: Rubber	1
2		Pin: Copper Alloy,Gold Plated	8
1		Housing: Nylon,Black	1

BOM LIST

All dimension in mm

PRODACONN

TOLERANCE UNLESS OTHERWISE SPECIFIED: ±0.5

REV.: 01

SCALE: 1:1

DRAWN BY	APPROVED BY	DATE(Y/M/D)	PAGE	SIZE
YU-FEI	Roy	2021/09/06	1/1	A4

PART NO: CCD08-MMPF-LS0-F0

CUSTOMER NO:

TITLE: CIRCULAR MIDDLE PANEL

THIS DOCUMENT IS CONFIDENTIAL AND A PROPERTY OF PRODACONN DISCLOSURE TO THIRD PARTY HAS TO BE AUTHORIZED BY PRODACONN

PRODACONN