REV.	ECN NO.	DATE	SIGN	DESCRIPTION
01	Initial Release	2021/07/30	Ann	New Item

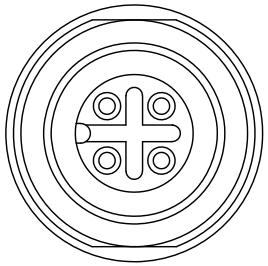

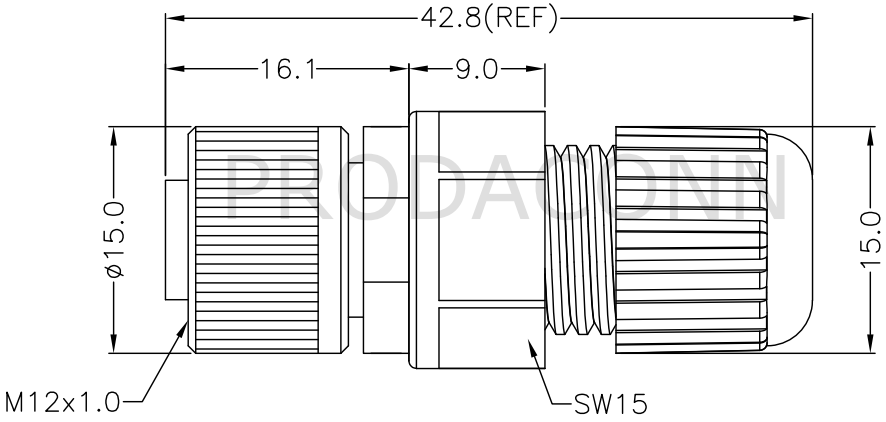

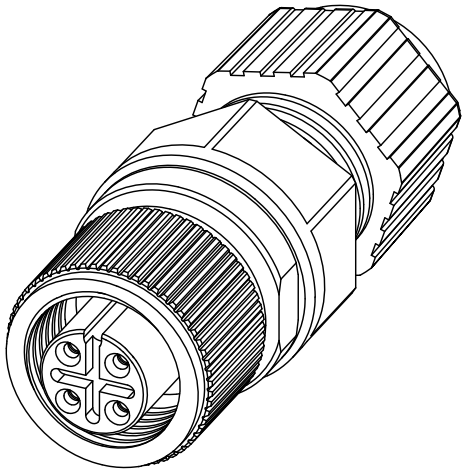

PRODACONN

柏達康科技有限公司
Prodaconn
2021/07/30
ISSUSED

Note:
* IP Grade: IP67
* Rated current: 4A
* Rated voltage: 250V AC/DC
* Recommend Cable OD: 5.0~6.8mm

NO.	ITEM	SPEC	QTY
9	Sealing Nut	Nylon,Black	1
8	Seal	Silicone	1
7	Clamp Ring	Nylon,Black	1
6	Gasket	Silicone	1
5	Nut	Aluminum Alloy,Nickel Plated	1
4	Shell	Copper Alloy,Nickel Plated	1
3	O-Ring	EPDM	1
2	Pin	Copper Alloy,Gold Plated	4
1	Housing	PBT,Black	1

BOM LIST

PRODACONN

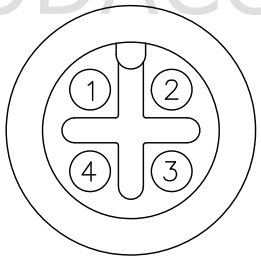

Pin Assignments
Front View

PRODACONN

All dimension in mm

TOLERANCE UNLESS OTHERWISE SPECIFIED	REV.
±0.5	01
	SCALE 1:1

DRAWN BY	APPROVED BY	DATE(Y/M/D)	PAGE	SIZE
Ann	Roy	2021/07/30	1/1	A4

PART NO: 12A04-SASH-LS0-F0

CUSTOMER NO:

TITLE: M12,A-CODE,ASS'Y

THIS DOCUMENT IS CONFIDENTIAL AND A PROPERTY OF TiMyn. DISCLOSURE TO THIRD PARTY HAS TO BE AUTHORIZED BY Prodaconn.